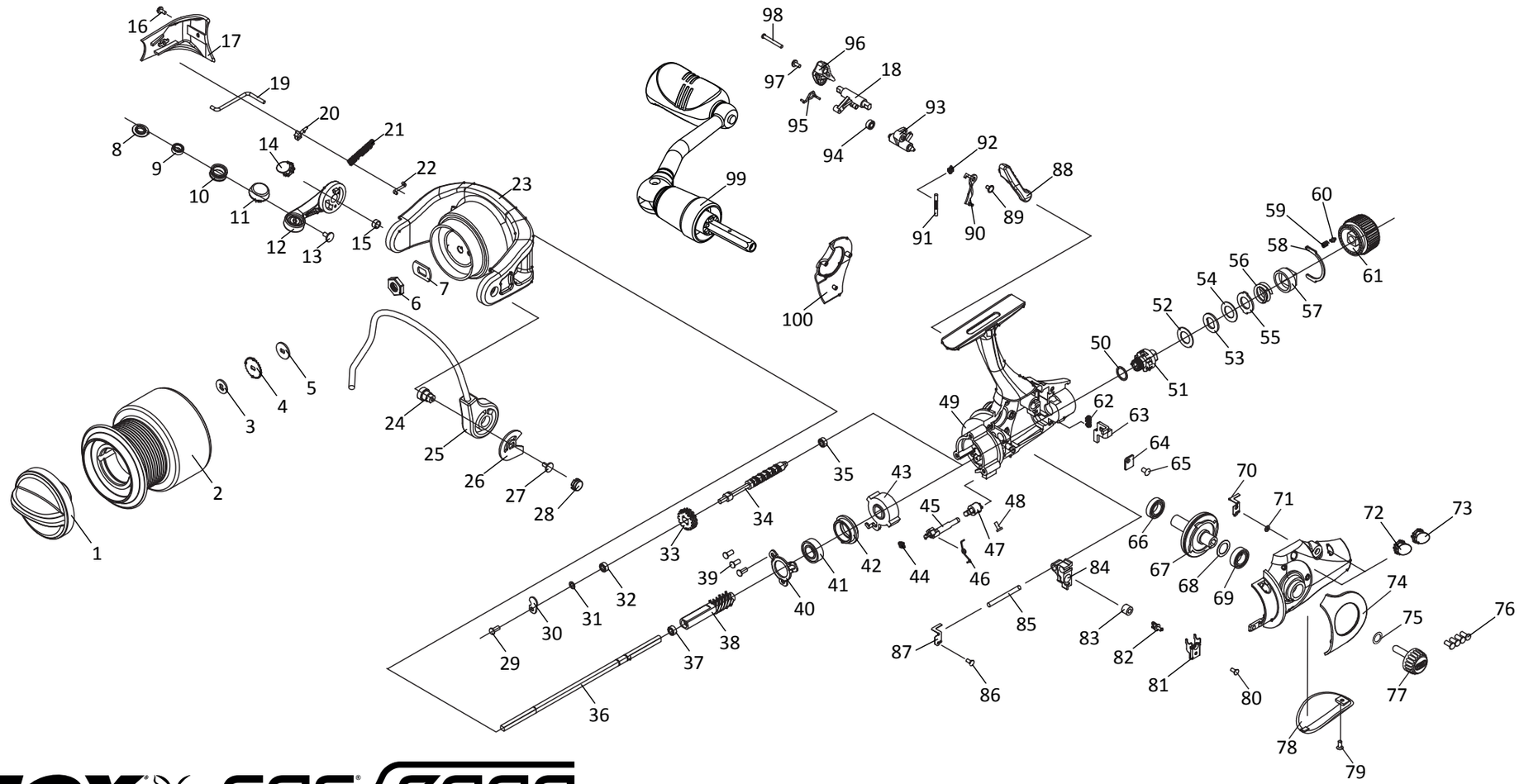

FOX EOS 7000

NO.	PART NAMES
1	FRONT CLUTCH KNOB
2	SPOOL
3	WASHER
4	CLICKER PLATE
5	WASHER
6	NUT
7	NUT RETAINER
8	LINE ROLLER END PLATE
9	BEARING
10	LINE ROLLER
11	BAIL ARM LINK
12	LINE ROLLER BOSS
13	SCREW
14	SCREW COVER
15	BUSH
16	SCREW
17	ROTOR SIDE COVER
18	FREE SPOOL BLOCK
19	BAIL ARM PUSH ROD
20	SPRING HOLDER
21	SPRING
22	LEVER
23	ROTOR
24	BUSH
25	BAIL ARM
26	BAIL ARM PLATE
27	SCREW
28	SCREW COVER
29	SCREW
30	PLATE
31	BEARING
32	BEARING
33	GEAR
34	OSCILLATING SHAFT
35	BEARING
36	MAIN SHAFT
37	BEARING
38	PINION
39	SCREW
40	BEARING PLATE
41	BEARING
42	BEARNG HOLDER
43	ANTI REVERSE BEARING
44	SPRING
45	ANTI REVERSE LINKAGE
46	TORSION SPRING
47	ANTI REVERSE SWITCH
48	SPRING
49	MAIN BODY
50	SHIM
51	DRAG HOLDER
52	CLUTCH PLATE
53	CLUTCH PLATE
54	CLUTCH PLATE
55	CLUTCH PLATE
56	CLUTCH SPRING
57	THREADED INSERT
58	RETAINER PLATE
59	SPRING
60	PIP
61	DRAG KNOB
62	SPRING
63	PUSH PLATE
64	RETAINER PLATE
65	SCREW
66	BEARING
67	MAIN GEAR
68	SHIM
69	BEARING
70	CLICKER SPRING
71	RETAINER
72	SCREW COVER
73	SCREW COVER
74	SIDE PLATE
75	RED WASHER
76	SCREWS
77	HANDLE KNOB
78	COVER PLATE
79	SCREW
80	SCREW
81	COVER PLATE
82	TOOTH
83	TOOTH BUSH
84	TOOTH HOLDER
85	OSCILLATING SUPPORT
86	SCREW
87	CLICKER PLATE
88	FREE-SPOOL LEVER
89	SCREW
90	PUSH PLATE
91	PIN
92	SPRING
93	FREE-SPOOL ARM
94	BEARING
95	SPRING
96	FREE SPOOL LEVER
97	SCREW
98	SCREW
99	SINGLE HANDLE
100	COVER PLATE